29-210-17 Tunic Dress

© Pierrot Yarns (Gosyo Co., Ltd.). Translation by Linda Lanz.

Materials

- Pierrot Yarns Soft Merino [100% merino wool; 104 yds/ 95m per 1.41 oz. / 40g skein];
    - color #1 ivory; 3 skeins [100g]
    - color #6 light beige; 5 skeins [130g]
    - color #7 brown; 4 skeins [110g]
- 3.5mm (US E), 4.0mm (US G), and 5.0mm (US H) crochet hooks or sizes necessary to achieve gauge

Gauge

Gauge measured in a swatch 10cm/4" square.

- pattern stitch, 3.5mm hook: 19 sts and 9 rows
- pattern stitch, 4.0mm hook: 18 sts and 8 rows
- pattern stitch, 5.0mm hook: 15.5 sts and 7.5 rows

Finished measurements

- bust 82cm/32.3"
- cross back width 32cm/12.6"
- length 52cm/20.5"

Crochet Tips

Ch 156 and work in pattern stitch, changing hook size when indicated.

Finishing: Join shoulders with woven seam. Work edging A around neckline and armholes and edging B around hem. Crochet 3 cords, then thread them through eyelets in pattern stitch at neckline and each side of skirt. Alternatively, thread neckline cord around waist (creating empire waist look) or other desired location.

Abbreviations: rep = repeat(s)

●back, front

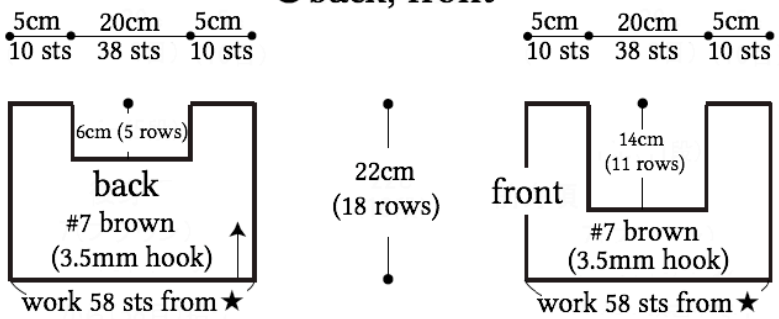

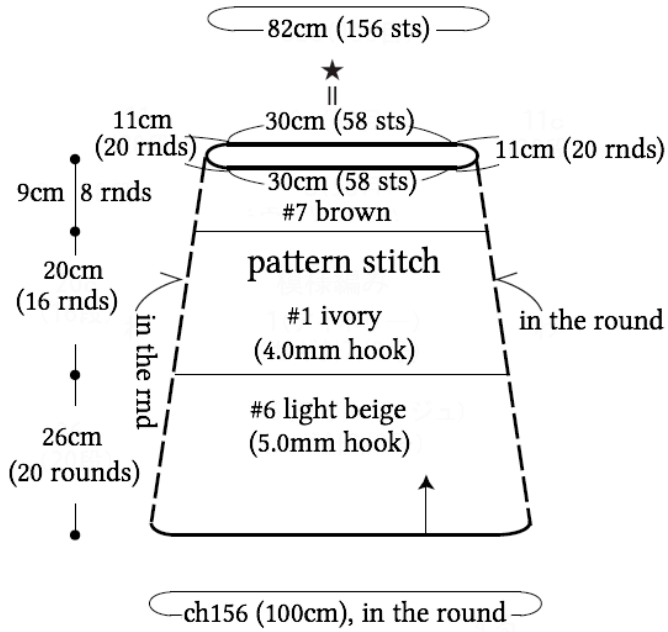

●edging

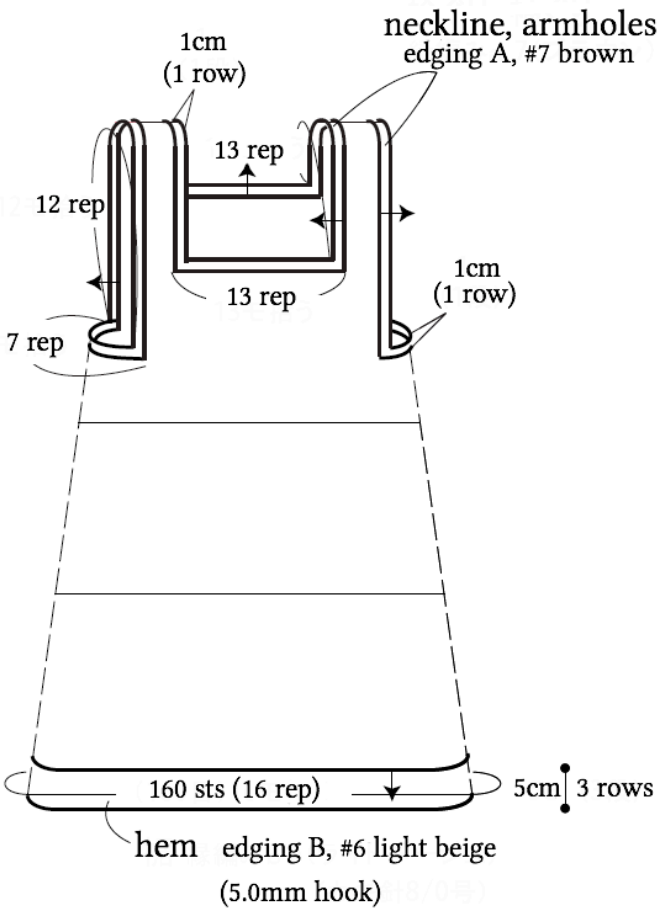

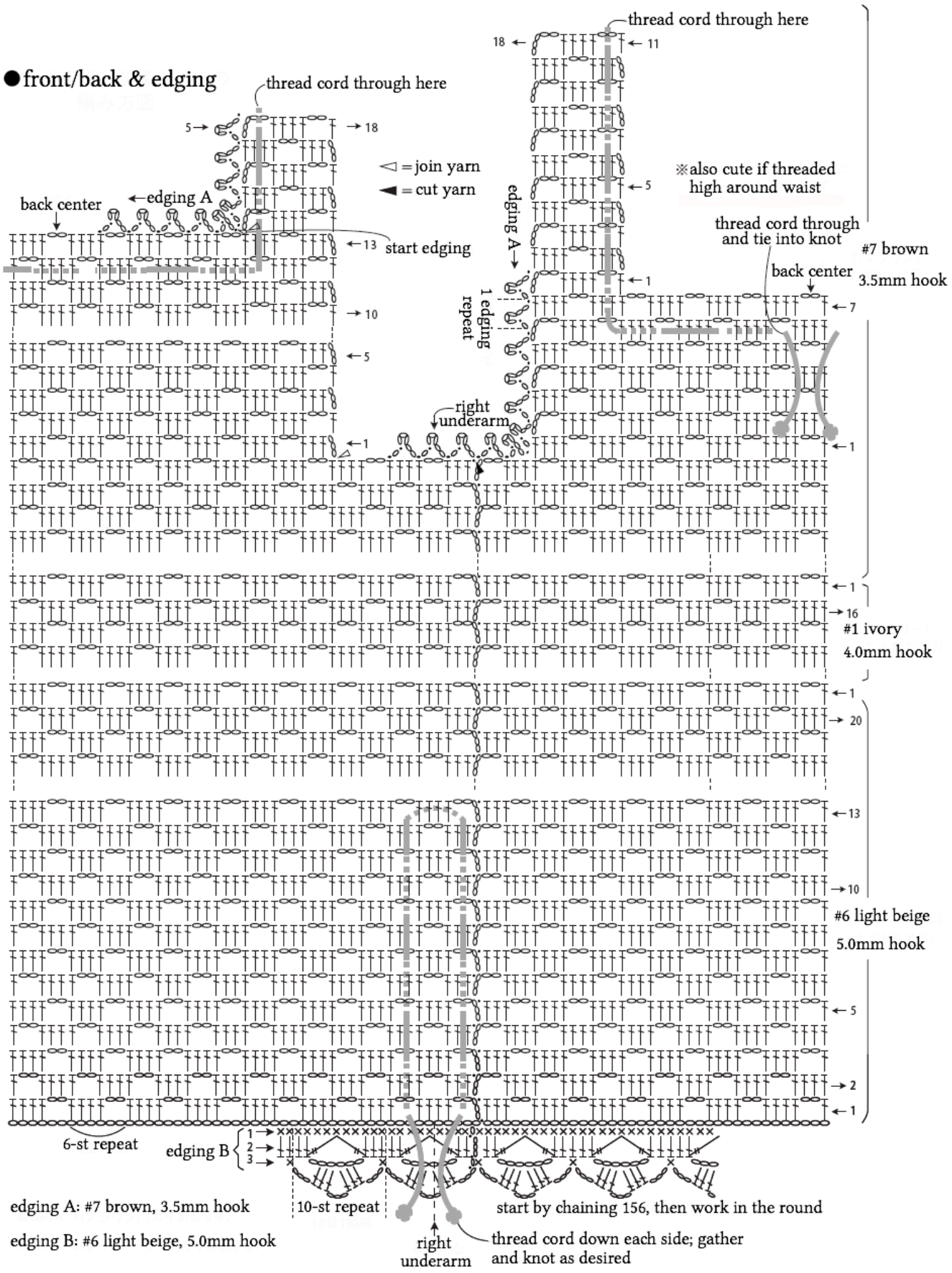

● front/back & edging
thread cord through here
back center
edging A
start edging
◁ = join yarn
◀ = cut yarn
edging A
1 edging repeat
right underarm
thread cord through here
※also cute if threaded high around waist
thread cord through and tie into knot
back center
#7 brown
3.5mm hook
#1 ivory
4.0mm hook
#6 light beige
5.0mm hook
6-st repeat
edging B
10-st repeat
start by chaining 156, then work in the round
right underarm
thread cord down each side; gather and knot as desired
edging A: #7 brown, 3.5mm hook
edging B: #6 light beige, 5.0mm hook

●cord (3.5mm hook)

1 cord in #7 brown for neckline
2 cords in #6 light beige for sides
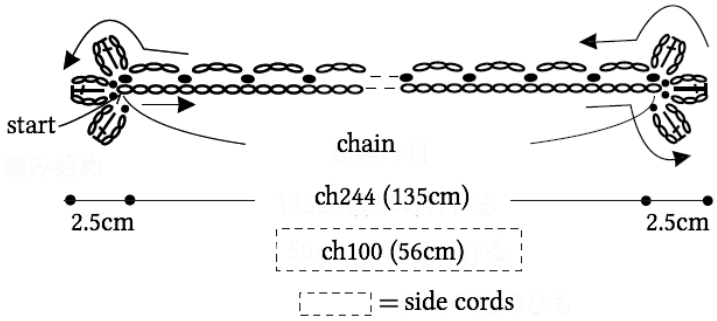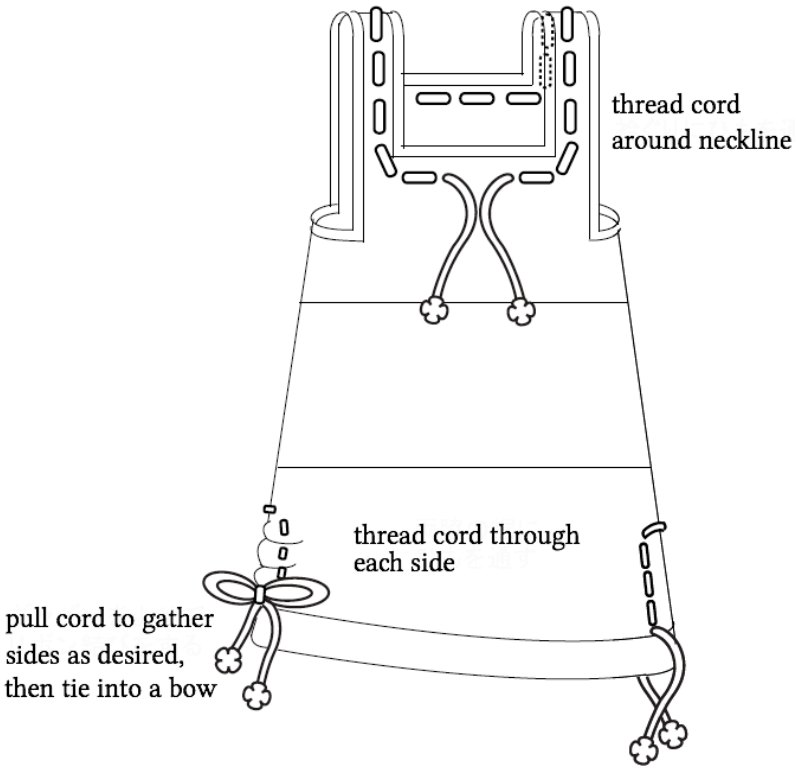
※decoration identical on each end